DiGiGrid MGR

User Guide

Contents

Waves Inc
2800 Merchants Drive, Knoxville, TN 37912 USA
1-865-909-9200
www.waves.com

Introduction

The DiGiGrid MGR is used to connect MADI-enabled devices to a Waves SoundGrid network for plugin processing and/or DAW playback and recording. The MGR unit is equipped as standard with Quad MADI BNC connections across two Dual MADI Interface modules. Optical MADI connection are available as an upgrade option by swapping either one or both BNC modules. Dual redundant PSU's ensure uninterrupted operation and guaranteed performance. Use the second SoundGrid network port to connect additional SoundGrid devices.

A SoundGrid I/O device is part of a SoundGrid network. SoundGrid is the Waves high-speed networking protocol for moving audio, clock, and other information between a host system and I/O devices—and between I/O devices themselves. A SoundGrid host configures the network, assigning servers and I/O devices to mix, process, or record, depending on the host. SoundGrid I/Os link to the SoundGrid network with standard Ethernet cable.

SoundGrid is scalable. Connect one I/O device to a DAW and you have a high-quality sound card. Add more I/Os and your system becomes more flexible and powerful. Depending on the host application, a SoundGrid host can assign up to sixteen I/O devices. Complete SoundGrid systems can be networked together to share devices.

Add a server to a SoundGrid system to offload plugin processing from the host CPU to a SoundGrid DSP server. This dramatically increases processing power and enables greater plugin counts, as well as providing very low system latency.

Hardware and Connections

MGR Rear Panel

1. Mains Inputs A & B – Connect both for redundant operation.
2. MADI Modules 1 & 2 – Either BNC or optical connections; connect to any MADI device.
3. Word Clock Input – Connect external word clock source; feeds both modules.
4. SoundGrid Net Status LEDs

    SoundGrid network found = Blue

    SoundGrid network not found = Flashing red

    Firmware update in progress = Yellow

    Hardware error = White

    Device Identify mode = Revolving colors
5. SoundGrid Network Port has two LEDs to indicate status

    Link/Activity Led = Flashing green

    GigE (Gigabyte Connection Indicator) = Solid orange

MADI Status LEDs – Colors and respective status as follows:

Green = MADI link
Off = no MADI link

MGR Front Panel

1. EtherCON port switched to rear RJ45 SoundGrid network connection
2. Power Switches A and B

The built-in network switch provides both front and rear mounted SoundGrid ports, making redundant recordings possible without any additional hardware. You can connect an MGR directly to a host computer and to one other device (e.g., I/Os, SoundGrid server) without needing an Ethernet switch. For installations that include more than two SoundGrid ports, a 1 GB SoundGrid approved Ethernet switch is necessary. It is not important which of the two Ethernet ports is used to connect to the SoundGrid network.

Getting Started

- (A) Connect the hardware
- (B) Install the software
- (C) Configure your system

(A) *Connect the Hardware*

One I/O

In this example, one MGR is connected directly to the SoundGrid host computer using a Cat 5e Ethernet cable or better. The SoundGrid ASIO/Core Audio driver is used for plugin processing and/or DAW playback/recording.

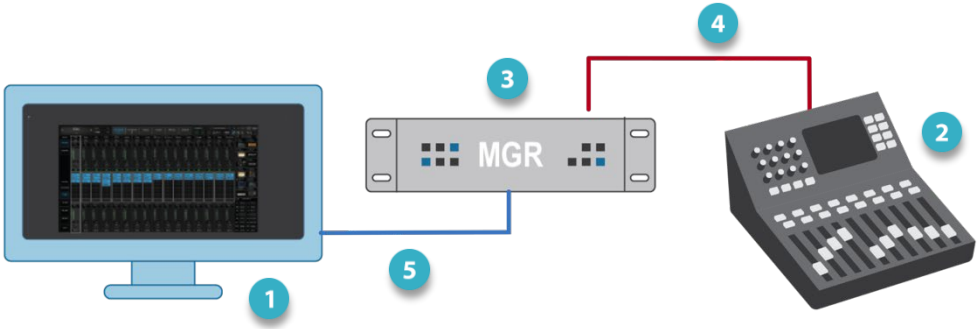

1. Host computer with SoundGrid application
2. MADI-enabled console
3. MGB/MGO
4. MADI connection
5. SoundGrid connection

The host computer's LAN port that's connected to the SoundGrid network should be used for SoundGrid only. Do not share this port with the internet or other networks.

In this configuration, all plugin processing is carried out on the host computer. The speed and power of the host defines overall latnecy.

Add I/Os

Adding I/O devices not only increases the number of I/O channels, but lets you have separate devices for stage and FOH, or live room and control room. When there is more than one network connection, use a "star" network configuration with a 1GB Ethernet switch. Only use switches tested and approved by Waves.

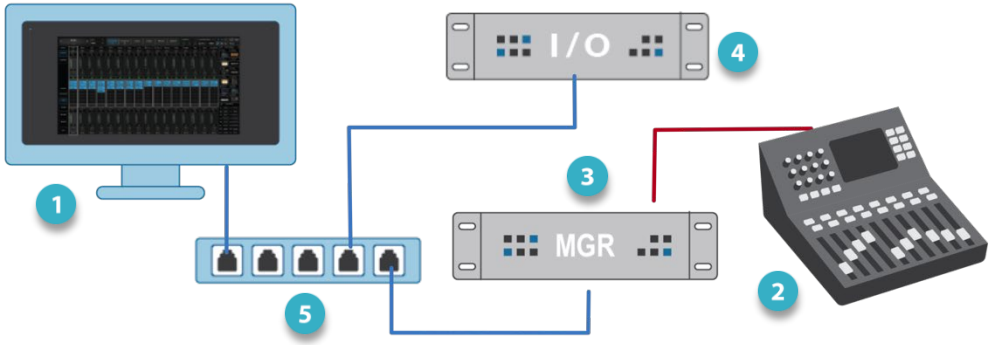

1. Host computer
2. MADI-enabled console or device
3. MGR
4. One or more SoundGrid I/O devices
5. 1GB Ethernet switch

See this support article for a list of supported switches.

You can connect and assign up to 16 SoundGrid I/O devices to the network, depending on the SoundGrid Host Application. You can also add more computers to enable audio streaming between hosts.

Add a Server

To add a server to your SoundGrid system, just connect it to the Ethernet switch and configure it in your host application. This moves all DSP processing from the host computer to the server, which provides a higher plugin count and enables the eMotion LV1 and ST mixers. Visit the waves.com hardware pages to learn more about SoundGrid servers. Consult your SoundGrid host application's user guide to learn about using servers.

B Download and Install Software

Installing a New SoundGrid Host System

Installing the Waves SoundGrid host application will also install the SoundGrid ASIO/Core Audio driver and applicable device drivers. Your devices will appear in the Inventory of your host system. If a device is not visible in the Inventory, you may need to install a specific driver from **Waves Central**—please see below. First, however, check the device's connections and power.

Adding an I/O Device to an Existing SoundGrid Host System

If you are already using a Waves SoundGrid host application and your device does not appear in the Network Devices list, use Waves Central to update the host application, which also updates the device drivers—or install just the missing device driver from Waves Central.[1]

Waves Central

All Waves software is downloaded and installed via the Waves Central application. To install a specific device driver, launch Waves Central and follow these steps:

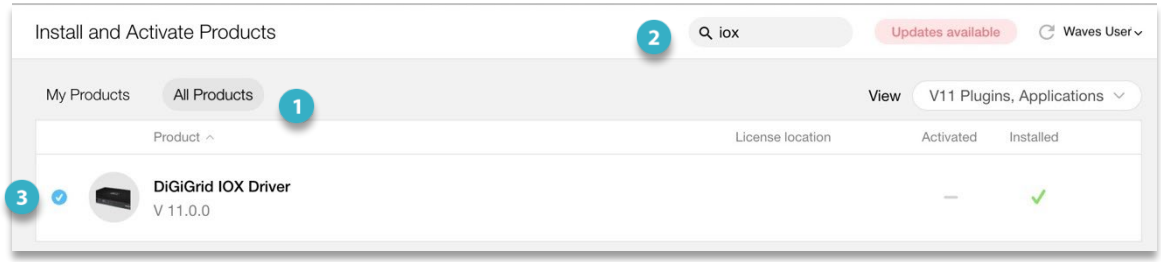

1. Choose **All Products**
2. Search for the driver by name
3. Choose the driver and click **Install**

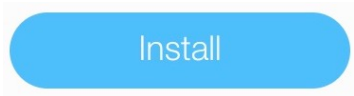

If you are new to Waves products, begin by downloading the Waves Central installer from the Waves Download Page. See the Waves Central User Guide for instructions on how to install drivers, plugins, and applications.

Licenses

You do not need a license to use this device. However, many hosts or specific host configurations do require a license. Refer to your host's product page for details.

---

[1] The SoundGrid QRec host is installed with any I/O.

Important Information regarding DiGiGrid MGR Drivers

The BNC and optical MADI modules used in the DiGiGrid MGR are identical to those used in the DiGiGrid MGB and MGO products. When connected to a SoundGrid Network, the MGR will identify as either an MGB (BNC) or MGO (Optical) device. When installing SoundGrid Drivers for the MGR, install the MGB/MGO package.

C Configure the System

A SoundGrid network is configured and devices are assigned in a host's **Setup** window. At the heart of this window are racks where devices are assigned. Any compatible device that's part of the host's SoundGrid network will be available for assignment. This collection of devices is called the **Inventory**. Setup is similar with all hosts: identify the host's LAN port, select a device slot, and use the drop-down menu to choose an available device.

SoundGrid QRec

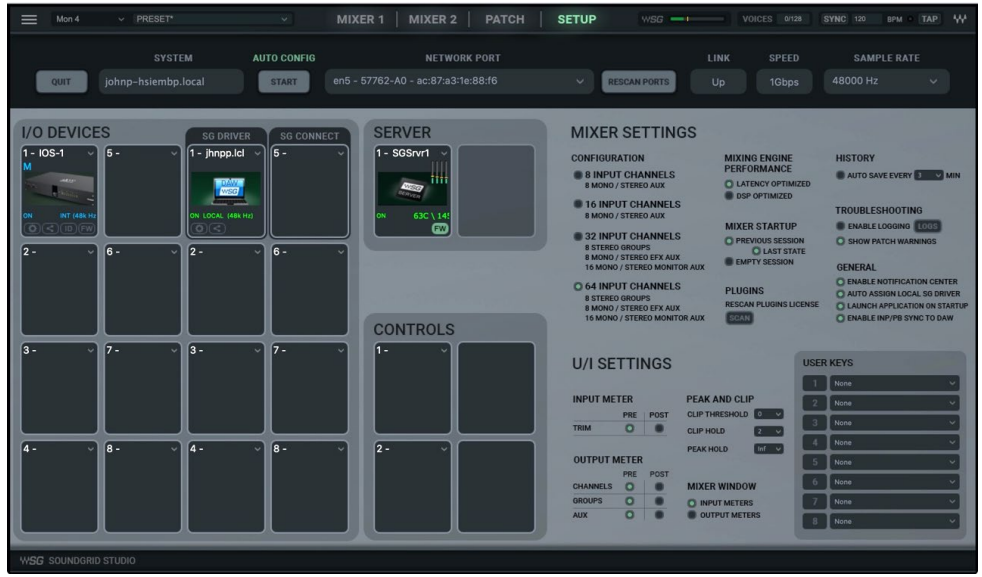

SoundGrid Studio Setup Window

All SoundGrid devices are configured in a similar manner. Throughout this section, we show DiGiGrid IOS as an example.

Manual Device Configuration

SoundGrid QRec

You can assign, remove, and manage a device manually. Click on the **plus** or **arrow** symbol in a device slot to open the **Device Menu**, then select a device.

Any device not already used will be available for assignment. If no other devices are assigned, the current device will become your clock master. Drivers and servers are assigned in the same manner.

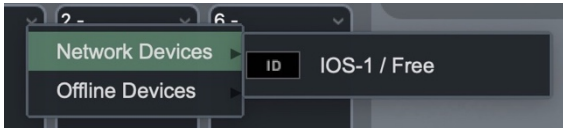

SoundGrid Studio

See the user guide of your host system for specific instructions on device assignment and I/O channel patching.

Automatic Device Configuration

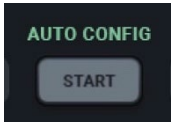

Certain SoundGrid hosts—including SoundGrid Studio, eMotion LV1 or SuperRack SoundGrid—offer an **Auto-Config** tool. Once your devices are connected and powered up, click **Auto Config** to start the configuration.

Auto-Config chooses the correct LAN port on the host computer and scans the SoundGrid network for devices. It then patches the devices to the host. We recommend that you let Auto-Config take care of things, at least when you are getting started. If later you add, remove, or swap a device, Auto-Config will reconfigure your inventory and re-patch.

Note that SoundGrid Studio assigns the SoundGrid driver automatically. SuperRack SoundGrid and eMotion LV1 require that the SoundGrid ASIO/Core Audio driver is assigned manually.

Device Firmware

An I/O that is using outdated or incompatible firmware will not work properly in a SoundGrid network until its firmware is updated. The color of the **FW** button in a device slot indicates the current firmware status.

SoundGrid Studio

SoundGrid QRec

Grey	Compatible firmware
Blue	Compatible firmware, but a newer version exists
Red	Firmware not compatible and must be updated in order to use

If a device requires updated firmware, click on the FW button to start a hardware scan. Do not disconnect the device or turn off the computer before **Done** appears. Once the update is ready, turn the device off and on to reset.

Identify a Device on the SoundGrid Network

SoundGrid Studio

SoundGrid QRec

Click on the **ID** button to activate a hard-to-miss LED on the panel of the corresponding hardware device. You can also activate the LED from the top bar of the device's control panel.

MGR (MGB/MGO) Control Panels

Depending on which modules are installed (BNC and/or Optical) the MGR will identify as either MGB (BNC) or MGO (Optical) device with their respective control panels. There are two ways to open the device control panel:

From the Device Rack

SoundGrid Studio

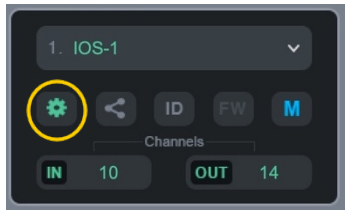

SoundGrid QRec

Click on the **Gear** button on a device in the rack slot.

From the Driver Control Panel

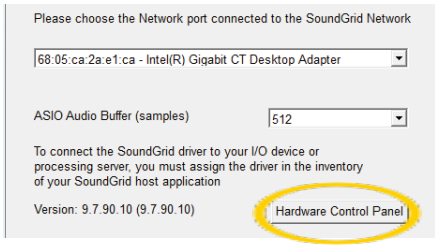

You can also access the control panels of all assigned I/O devices from Driver Control Panel application, which is located here:

PC: C:\Program Files (x86)\Waves\SoundGrid\Driver Control Panel

Mac: System HD/Applications/Waves/SoundGrid

MGR Control Panel Pages

The **About** and **System Info** pages provide information about the unit, such as MAC address, SOE master MAC Address, firmware version, and more. The **Clock** and **MADI Options** pages are used to set up and manage the MGR.

MADI Options Page

The MGR has Dual MADI Interface modules. Each module has its respective Control Panel. Click the **Identify** button to indicate which module belongs to this Control Panel.

One MADI connection supports 56 or 64 in/out channels at 44.1kHz/48kHz, and 28 or 32 in/out channels at 88.2kHz/96kHz.

In **MADI Port Settings**, set the number of available channels according to your MADI device settings. Range: 56/28, 64/32

While the MGR can deliver up to 256 channels at sample rates of 44.1kHz/48kHz, SoundGrid Driver is limited to 128 channels at any sample-rate.

Clock Page

Use the Clock page to set the clock source and sample rate settings for the device and to assess clock status.

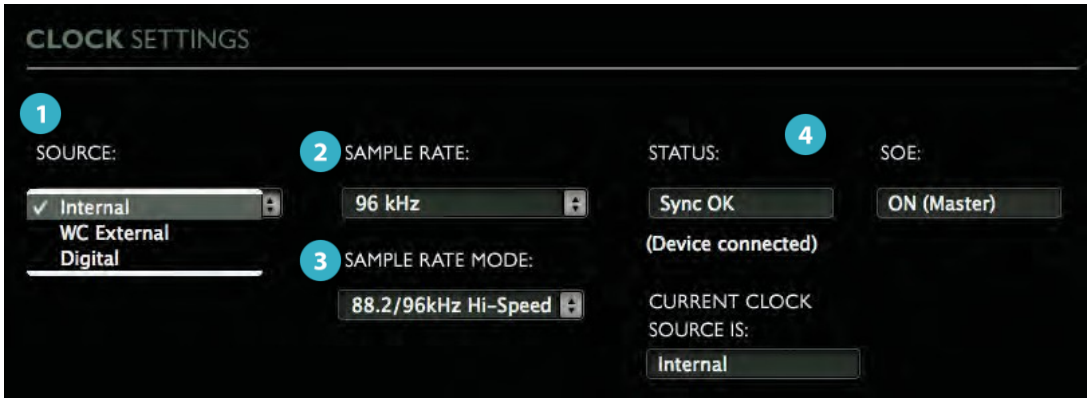

1 **SOURCE** sets the clock source

Internal	The interface itself provides the clock
External WC	The interface has a Word Clock Input connector to connect an external clocking source to sync all devices in your network to the external clock
Digital	Syncs via the BNC or optical MADI connection on MADI Port 1 or Port 2 (selectable). The MGB/MGO interfaces sync to the incoming MADI from the console or MADI enabled device.
Sync over Internet	Send or receive clock and sample rate over an Ethernet cable between SoundGrid network devices

2 **SAMPLE RATE** sets the sample rate when Clock Source is set to Internal. Range: 44.1 / 48 / 88.2 / 96 kHz

3 **SAMPLE RATE MODE** sets the MADI mode for 88.2 kHz / 96 kHz operation. Check your MADI enabled console or device manual for the proper selection.
Range: High-Speed, SMUX

4 CLOCK STATUS INDICATORS

Three windows on the right side of the Clock control panel help you to quickly assess the network status of the device.

Status	Reports the presence or absence of sync between the MGR and the SoundGrid network
Current Clock Status	Displays the current sync method. This may differ from the choice made in the Source menu
SOE	Indicates whether this MGR is the master or a slave in the SoundGrid network. This mirrors the status information in the SoundGrid Studio Device Rack

When the device is a slave in the SoundGrid network, you will likely sync it to the SoundGrid network clock (via SOE).

Even when the device is an SOE slave, you can lock it to an external clock source. For example, if another SoundGrid I/O device is the SOE master and is locked to a word clock device, you may choose to receive clock from the same external device over word clock from the master device rather than via network SOE.

CLOCK SOURCE AUTO-SWITCHING

In the event that the selected clock source fails, MGR has a series of clock fallback layers, in this order: Word Clock input, MADI (port A), SOE, Internal. If an MGR is clocked to WC and this external source fails, it will first try to clock to MADI (port A), then SOE. If that not successful, it will fall back to Internal.

System Info Page and About Page

The **About** page contains a description of the device. The **System Info** page contains technical details about the device, including MAC address, Firmware version, and Module version. This information is useful for troubleshooting. Please have this information handy if you contact Waves technical support concerning the device.

Presets

The Top Bar is used to load and save device presets and to identify device hardware. A saved preset includes all Clock and MADI Options panels parameters. Save MGR presets to use on future sessions or copy them to another computer to duplicate a configuration.

Click the **Identify** button to indicate which MGB/MGO module belongs to this Control Panel. Clicking the button causes the Network LED on the panel of the module to flash in a rather psychedelic manner.

Using an I/O Device with a DAW

Setting up SoundGrid devices with a DAW involves these steps:

Patch the I/O device and the SoundGrid ASIO/Core Audio driver

When using a DAW on a SoundGrid network, the SoundGrid ASIO/Core Audio driver serves as a bridge between the I/O device and the DAW. It enables the I/O to communicate with the DAW and it provides patches. Patching an I/O to the SoundGrid ASIO/Core Audio driver differs slightly among hosts. When you use a host's Auto-Config tool, the host input channels are patched automatically, in an order based on rack. The order of the devices in the Device Rack determines the default patching order. Please refer to your SoundGrid host's user guide for details.

Configure the DAW for SoundGrid

1. Set the DAW playback engine to "Waves SoundGrid." The SoundGrid driver channels will now appear in the DAW I/O preferences and in the Input/Output selector in each DAW channel.
2. Route the DAW inputs and outputs to SoundGrid.

Specifications

- 1U rackmount
- Quad MADI to SoundGrid interface
- Fitted with dual BNC MADI (MGB) I/O Modules as standard. Optional MGO module for Optical MADI support.
- Supported sample rates: 44.1 kHz, 48 kHz, 88.2 kHz, 96 kHz
- Built-in SoundGrid network switch
- 2 SoundGrid Ethernet ports (RJ45)
- Support for 64 and 56 channel modes
- Support for double wire (48k frame) and single wire (96k frame) @ 96kHz
- 224/256 channel I/O @ 48kHz (Recording and playback of more than 128 channels at 48kHz requires a second computer.)
- 112/128 channel I/O @ 96kHz
- Clock Synchronization via (in fallback order): Word Clock input, MADI (port A), SoundGrid (SOE), Internal
- Dual AC input power supplies with redundant operation

Dimensions**:** 482.6mm (w) x 306mm (d) x 43.6mm (h)

Weight: 4.5kg (7kg boxed)

Power Requirements: 100VAC–240 VAC, 1.5 amp, 50/60 Hz

Specifications are subject to change without notice